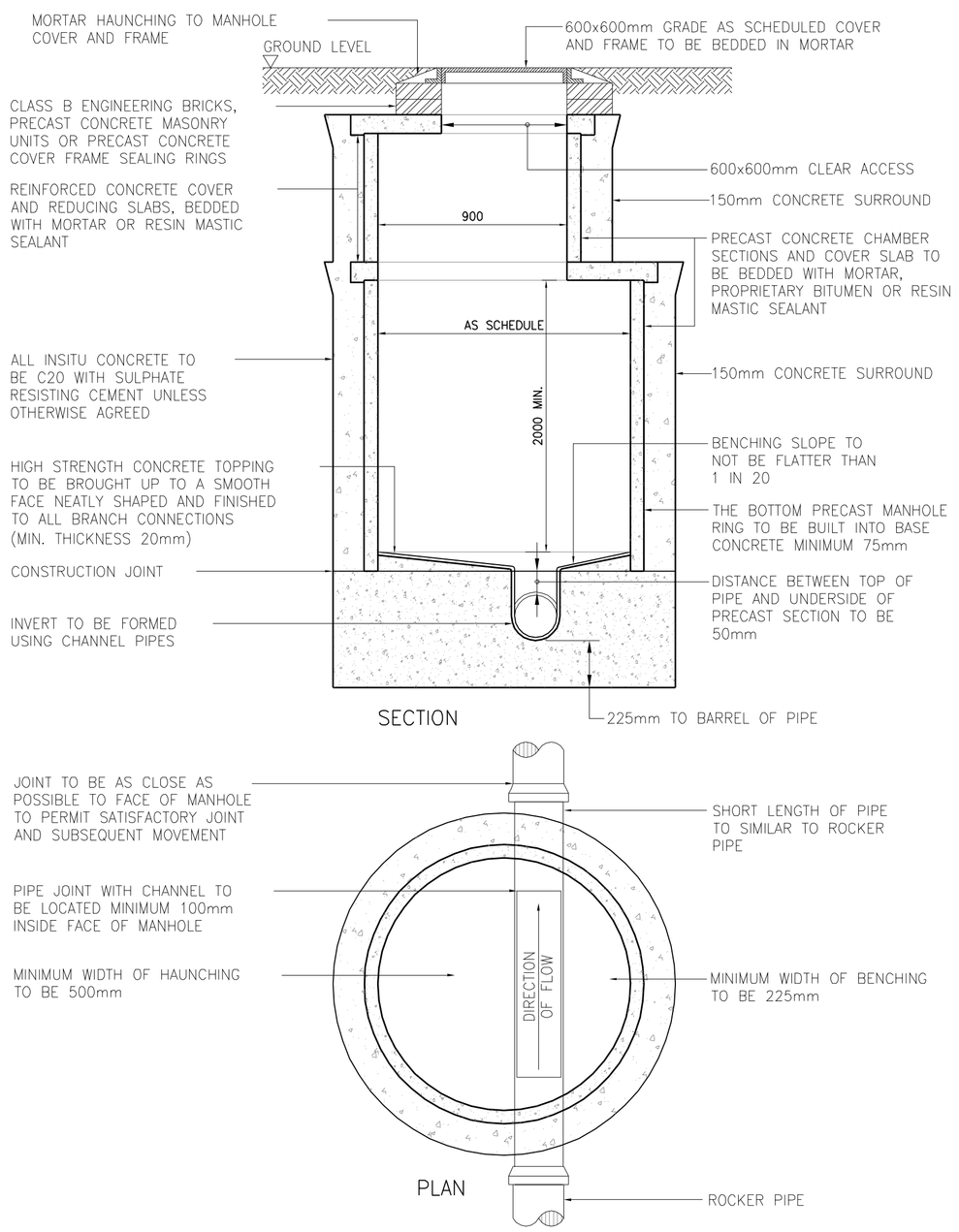

TYPICAL MANHOLE DETAIL – TYPE 1

(SCALE 1:20 APPROX)

DEPTH TO SOFFIT OF PIPE 3000mm TO 6000mm

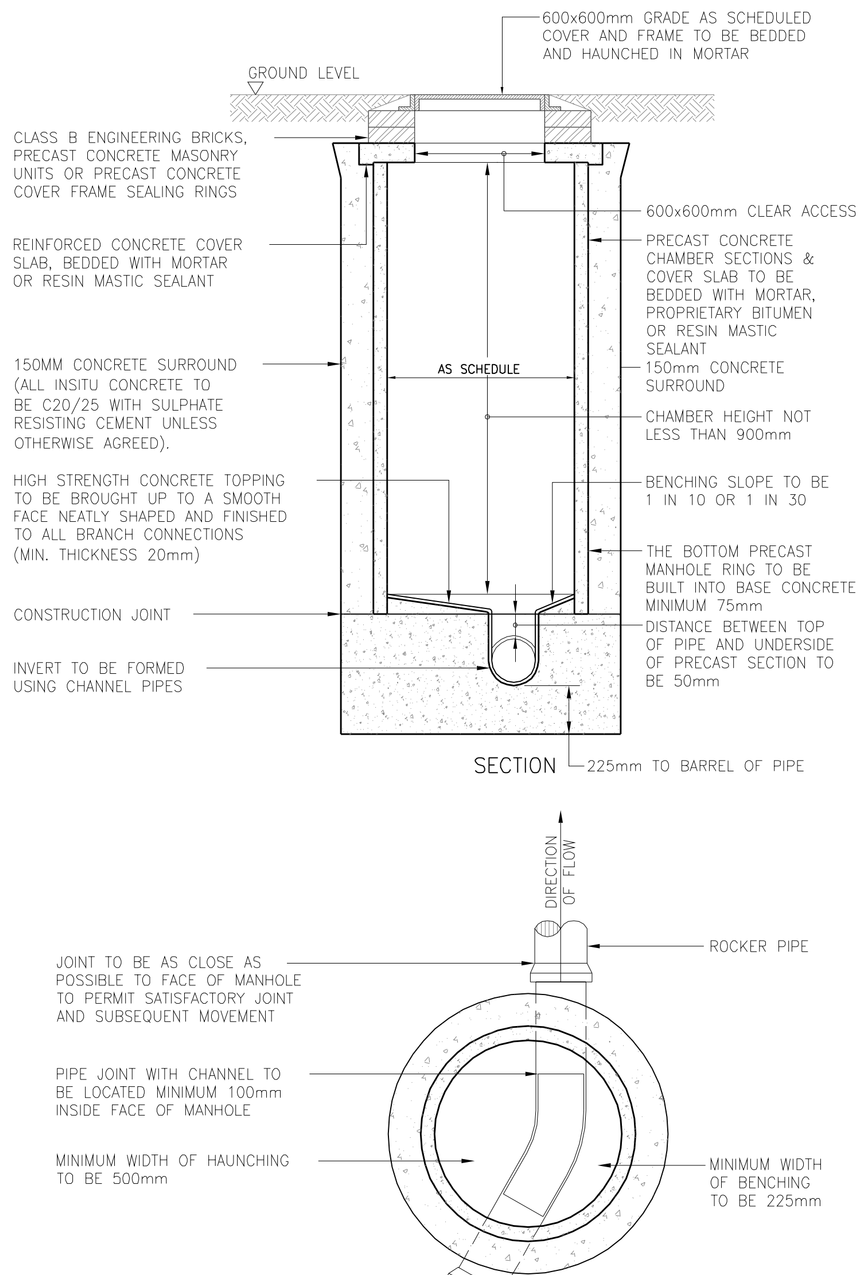

TYPICAL MANHOLE DETAIL – TYPE 2

(SCALE 1:20 APPROX)

MAXIMUM DEPTH FROM GROUND LEVEL TO SOFFIT OF PIPE 3000mm

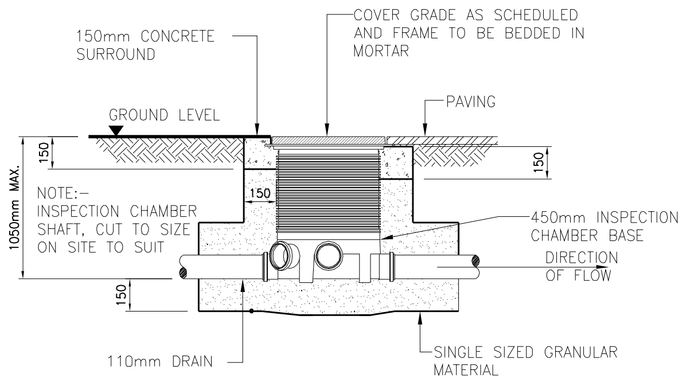

IN SOFT LANDSCAPE AND FOOTWAYS

TYPICAL 450mm INSPECTION CHAMBER – TYPE 4

(SCALE 1:20 APPROX)

MAXIMUM DEPTH FROM GROUND LEVEL TO SOFFIT OF PIPE 1050mm

SITED IN DOMESTIC DRIVEWAYS OR FOOTWAYS

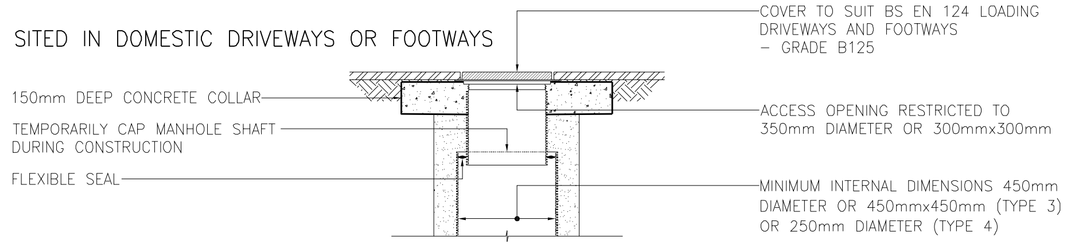

SITED IN SOFT LANDSCAPED AREAS

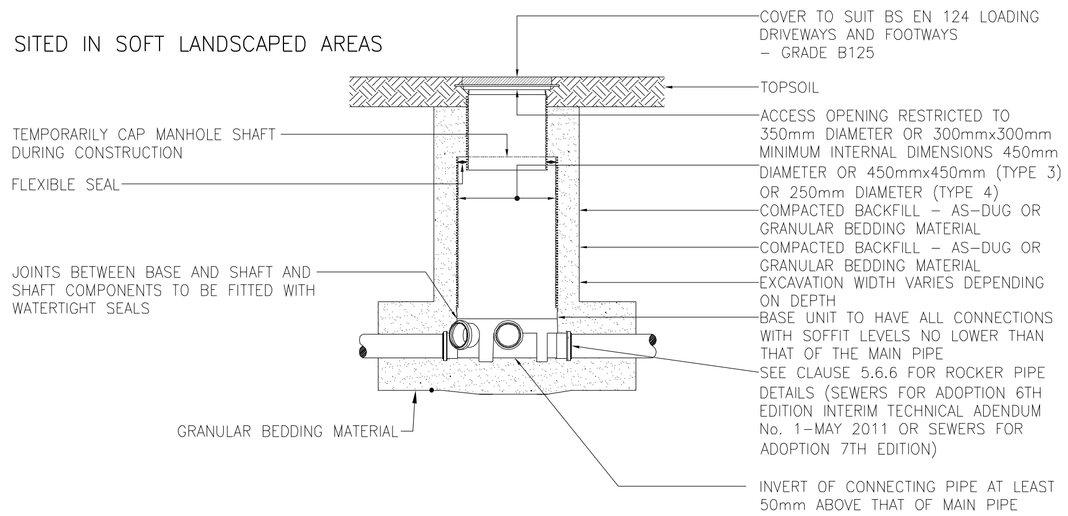

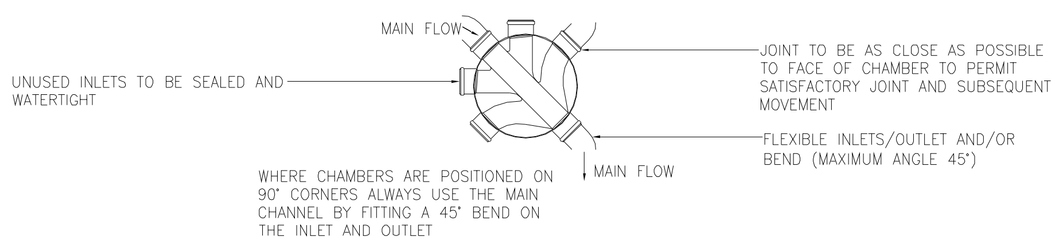

PLASTIC CHAMBERS AND RINGS SHALL COMPLY WITH BS EN 13598–1 AND BS EN 13598–2 OR HAVE EQUIVALENT APPROVAL

TYPICAL ACCESS CHAMBER DETAIL – TYPES 3 & 4

(FLEXIBLE MATERIAL DETAIL)

(SCALE 1:20 APPROX)

MAXIMUM DEPTH FROM COVER LEVEL TO SOFFIT OF PIPE FOR AREAS NOT SUBJECT TO VEHICLE LOADING IR AREAS SUBJECT TO LIGHT VEHICLE LOADING 3m, NON ENTRY

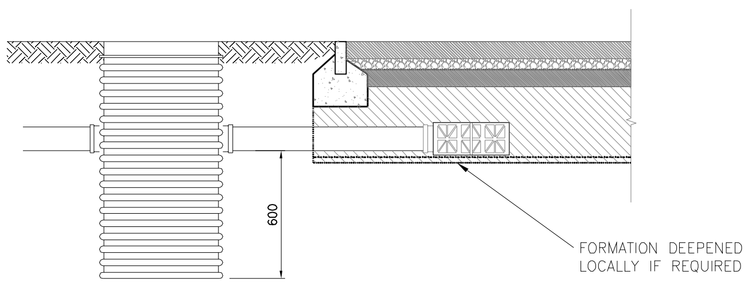

TYPICAL SILT TRAP DETAIL – WITH INLET

(SCALE 1:20 APPROX)

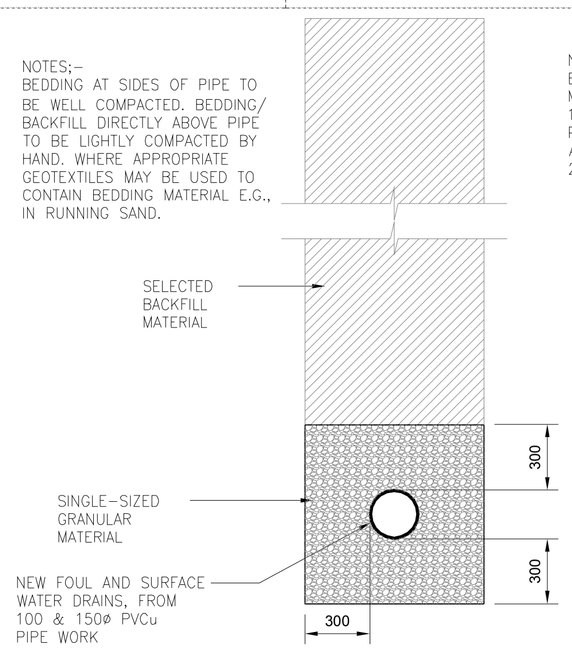

TYPICAL BEDDING DETAIL PIPES DEEPER THAN 1200mm

(SCALE 1:20)

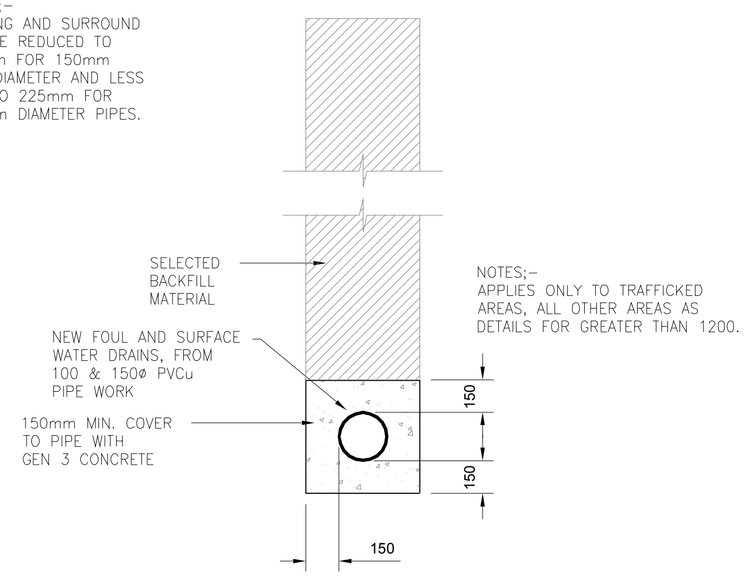

TYPICAL BEDDING DETAIL FOR PIPES SHALLOWER THAN 1200mm

(SCALE 1:20)

© The Copyright of this drawing remains with William Cook Associates and is not to be reproduced without written approval. Dimensions are not to be scaled from this drawing. The Contractor is to check all dimensions on site and report any discrepancies to the Contract Administrator. This drawing is to be read in conjunction with all other standard documentation. If in doubt, ASK.

Notes :

1. This drawing is to be read in conjunction with all our other drawings, details & specification.
2. This drawing is to be read in conjunction with the Architects drawings and all our drawings numbered 14037 inclusive.
3. Do not scale from this drawing. This drawing is diagrammaic only, so written dimensions should be taken in preference to scaled dimensions.
   The contractor is to take site dimensions for all items.
4. All existing site levels are assumed to be approximate and are to be confirmed on site.
5. All drainage pipes and fittings to be Marley PVCu or similar approved, 100mm Ø, U.N.O.

Rev.	Description	Date	By
C1	Construction issue.	20/11/17	gb
P1	First Issue	26/03/15	gb

cook associates

Architects

Engineers

Surveyors

Interior Designers

Capital House, 3 Jubilee Way,
Faversham, Kent ME13 8GD
Tel: 01795-532834 / 531002
e-mail: mail@cook-design.com
Fax: 01795-535605
Website: www.cook-design.com

Client :
Millwood Designer Homes Limited

Project :
Polo Farm Sports Club
Littlebourne Road
Canterbury CT3 4AF

Project No :
14037

Drawing Title :
Highway & Drainage Details
Sheet 2 of 5

Drawn by : APJW	Checked by : GB
Date : January 2015	Scale @ A1: 1:20

Status: CONSTRUCTION

Drawing No : 603	Rev. No : C1